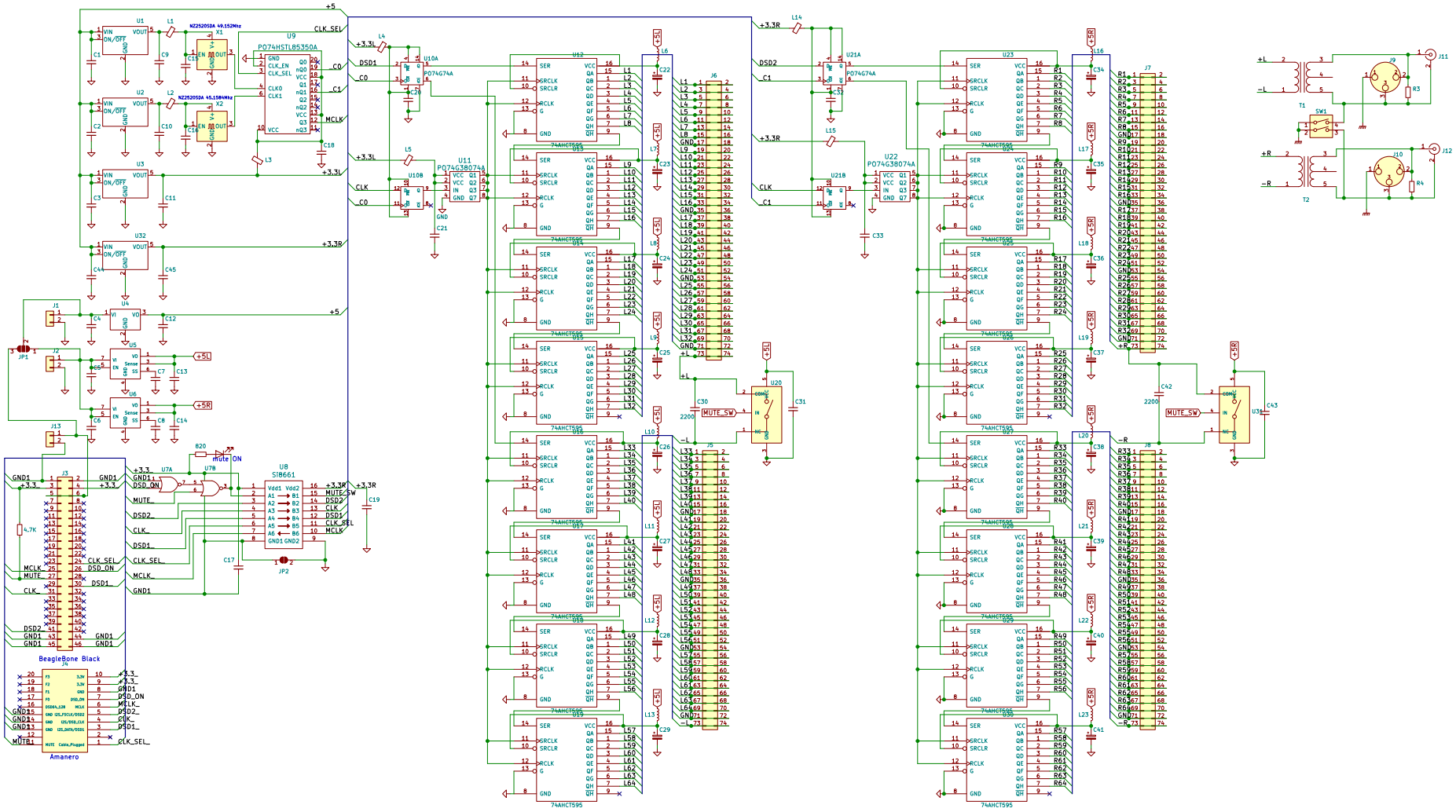

Sheet: /
File: DSC2_.sch

Title: BBB/Amanero+isolator+reclocker+DSC2

Size: A2	Date:	Rev:
KiCad E.D.A. kicad (6.0.0-rc1-dev-1056-gc6a971d97)		Id: 1/1